ALBARA ASSEMBLY INSTRUCTION
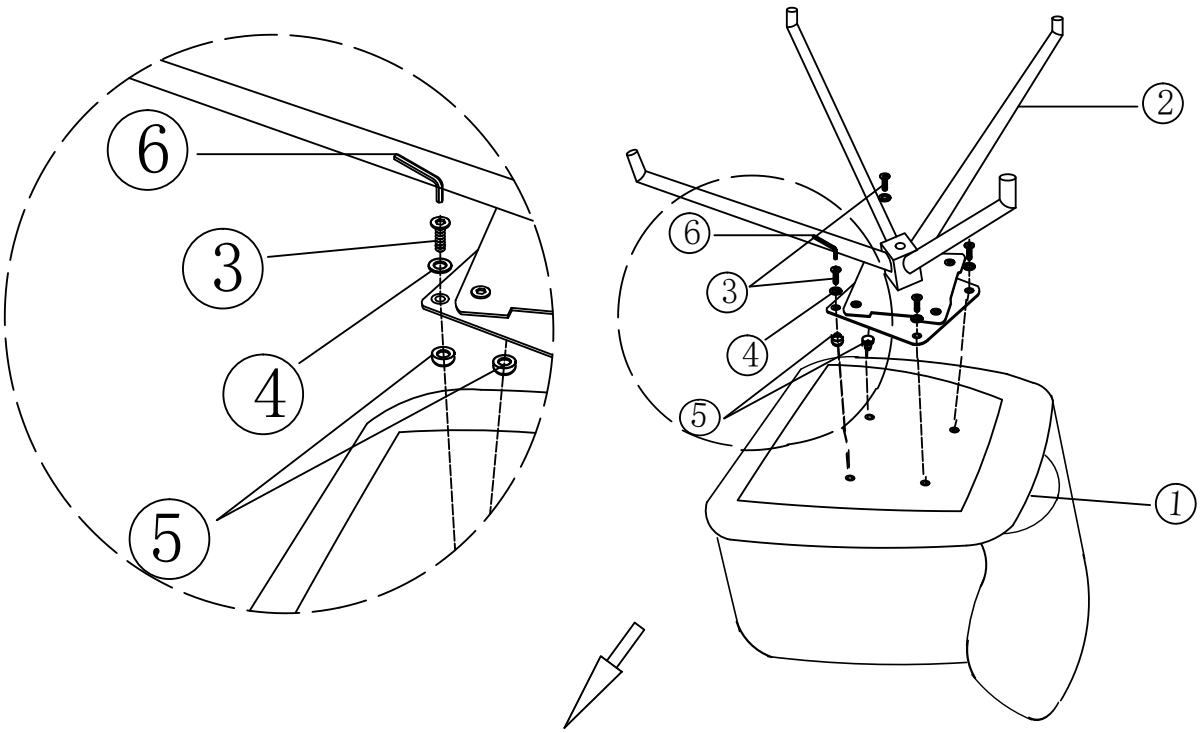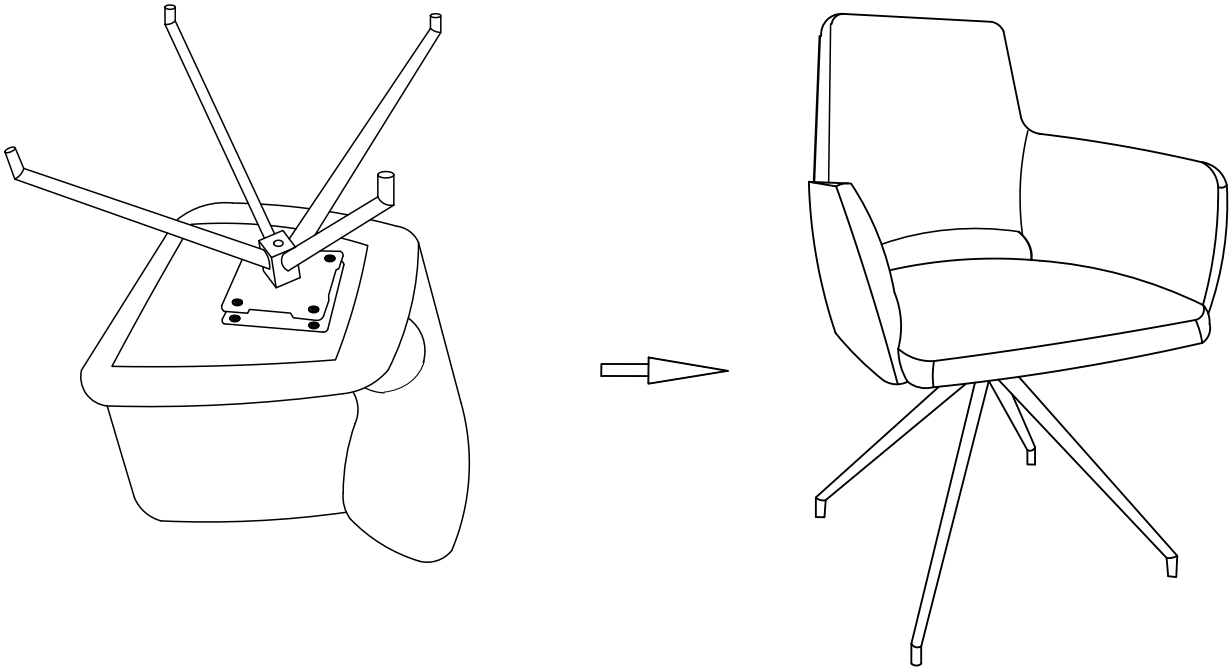
	① x1	② x1	M6*15 x4 ③	④ x4
	D16*5T x2 ⑤	⑥ x1