Assembly instructions Calde oval dining table

1.1		16pcs	1	2	3	4
1.2		2pcs	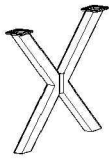	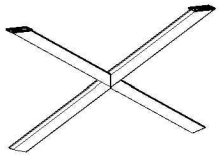		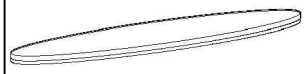
1.3		19pcs				
1.4		3pcs				
			1pcs	1pcs	1pcs	1pcs

Step-1

(2) Flip the leg on the gound to level

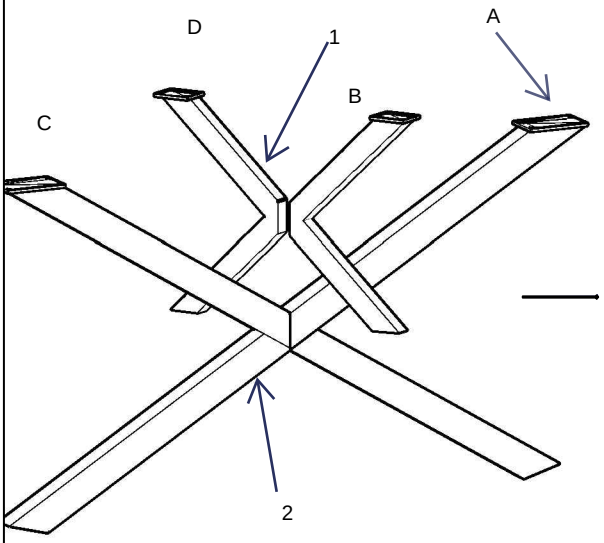

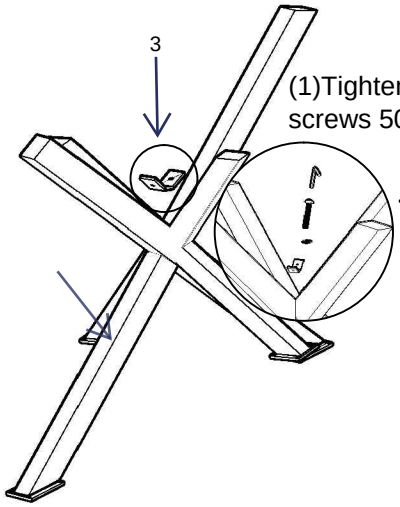

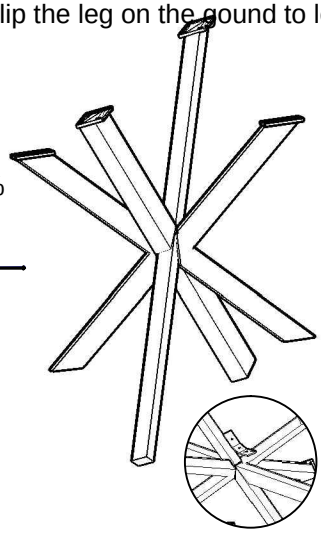

(3)Then tighten screws 100%

Step-2

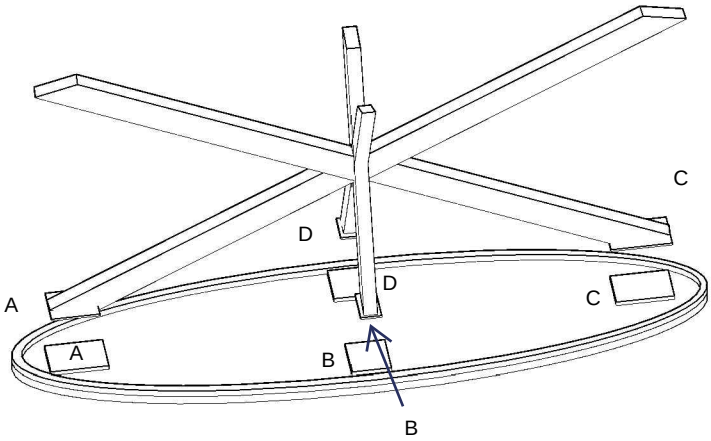

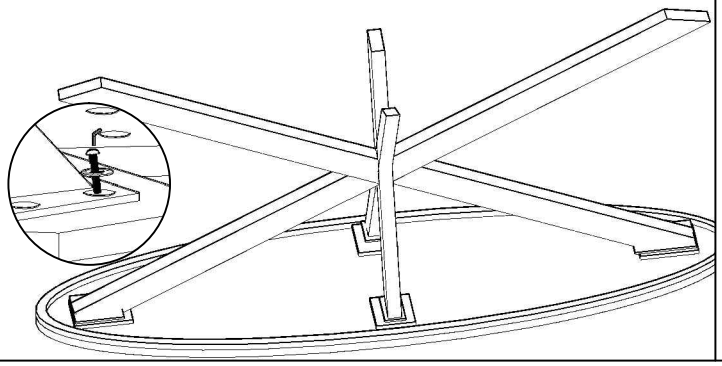
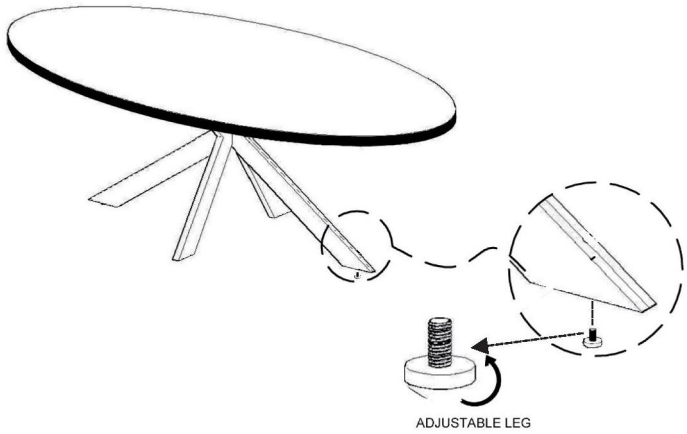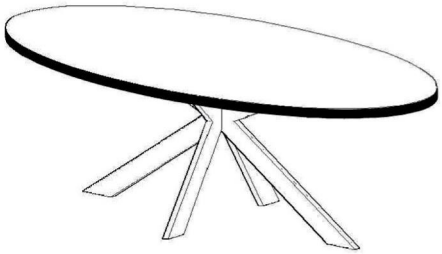
Step-3